IB-S2LIR100W2 - 2MP IR Water-proof Bullet Network Camera

- 2MP (1920 × 1080) H.265 coding
- Max.resolution: 1920 × 1080
- ICR auto switch, true day / night, ROI coding
- 3D DNR, digital WDR, HLC, BLC, Defog
- 20~30m IR night view distance
- 1CH audio input; Hardware reset
- Built-in micro SD card slot, up to 128GB
- DC12V/PoE power supply
- IP 67 ingress protection
- Support dual streams
- Support mobile surveillance by smart phones and tablet PCs with iOS or Android OS
- Intelligent analytics: video blur detection, line crossing detection and region intrusion detection

DIMENSIONS

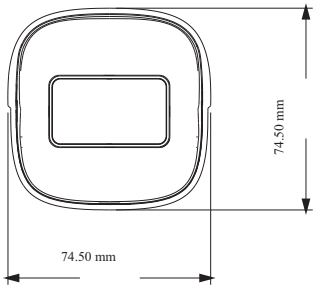

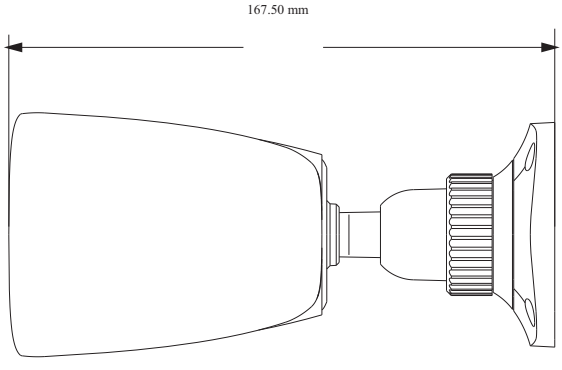

IB-S2LIR100W2 - 2MP IR Water-proof Bullet Network Camera

SPECIFICATIONS

Model Specifications	
Camera	
Image Sensor	1 / 2.9" CMOS
Image Size	1920 × 1080
Electronic Shutter	1 / 25 s ~ 1 / 100000 s
Iris Type	Fixed Iris
Min. Illumination	0.0035 lux@F1.2,AGC ON; 0 lux with IR 0.013 lux@F2.0,AGC ON; 0 lux with IR
Lens	2.8 mm @F2.0, (fixed lens), horizontal field of view: 107° 3.6 mm @F2.0, (fixed lens), horizontal field of view: 84.8° 6 mm @F2.0, (fixed lens), horizontal field of view: 52°
Lens Mount	M12
Wide Dynamic Range	Digital WDR
BLC	Yes
HLC	Yes
Digital NR	3D DNR
Angle Adjustment	Pan: 0°~360°; Tilt:0°~80°; Rotation: 0°~360°
Image	
Video Compression	Main stream: H.265 / H.264 Sub stream: H.265 / H.264 / MJPEG
H.265 Compression Standard	Main Profile@Leve4.1 High Tier
Resolution	1080P (1920 × 1080), 720P (1280 × 720), D1, CIF, 480 × 240
Main Stream	60Hz : 1080P(1 ~ 30fps) / 720P(1 ~ 30fps) 50Hz : 1080P(1 ~ 25fps) / 720P(1 ~ 25fps)
Sub Stream	60Hz : D1/CIF/480x240 (1~30fps); 50HZ: D1/CIF/480x240 (1~25fps)
Bit Rate	64 Kbps ~ 6Mbps
Bit Rate Type	VBR / CBR
Audio Compression	G711A / U
Image Settings	ROI, Saturation, Brightness, Chroma, Contrast,Wide Dynamic, Defog, Sharpen, NR,etc. adjustable through client software or web browser
ROI	Each ROI to be configured separately
Interfaces	
Network	RJ 45
Audio	1CH audio input
Storage	Built-in micro SD card slot; up to 128GB
Hardware Reset	Yes
Functions	
Remote Monitoring	Web browsing, CMS remote control
Online Connection	Support simultaneous monitoring for up to 3 users; Support multi-stream real time transmission
Network Protocol	UDP, IPv4, IPv6, DHCP, NTP, RTSP, PPPoE, DDNS, SMTP, 802.1x, FTP, UPnP, HTTPs, HTTP, QoS
Interface Protocol	ONVIF
Storage	Network remote storage; micro SD card storage
Smart Alarm	Motion detection, SD card full, SD card error
Intelligent Analytics	Video blur detection, line crossing detection and region intrusion detection
General Function	Watermark, IP address filtering, video mask, heartbeat, illegal login lock
PoE	Yes
IR Distance	20 ~ 30 m
Ingress Protection	IP 67
Others	
Power Supply	DC12V / PoE
Power Consumption	< 5.5W

Operating Environment	- 30 °C ~ 60 °C (-22°F~140°F) Humidity: less than 95 % (non-condensing)
Dimensions (mm)	167.5 × 74.5 × 167.5
Weight (net)	Approx. 0.39KG
Installation	Ceiling mounting; Wall mounting
Certificate	CE, FCC
Environmental Protection	Complies with Directive EU RoHS, WEEE(2012/19/EU) , directive 94/62/EC and REACH(EC1907/2006)